INFINITY™ Series Sprinkler with SMART ACCESS™
Installation and Service Guide

Toro's new INFINITY Series sprinklers with SMART ACCESS™ are designed specifically for Golf applications and extend and enhance Toro's industry leading line of Golf sprinklers. Manufactured from durable, high-strength engineering plastic and stainless-steel components, the INFINITY Series sprinklers incorporate many innovative and time-proven features for lasting, maintenance-free operation.

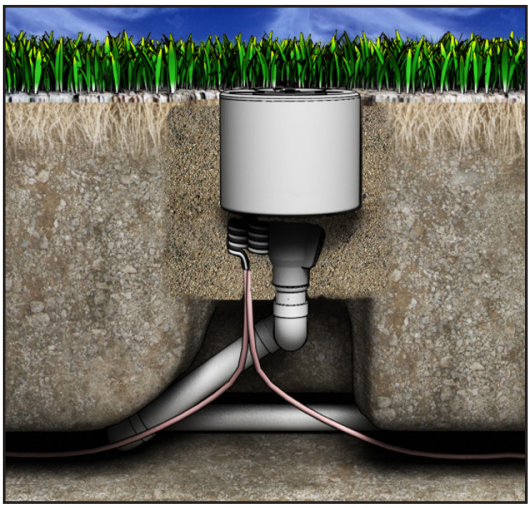

Six base models are available:

- **INF34** - 1" (25 mm) ACME inlet, full circle, dual trajectory
- **INF54** - 1.5" (40 mm) ACME inlet, full circle, dual trajectory
- **INF35** - 1" ACME inlet, full/part circle, dual trajectory
- **INF55** - 1.5" ACME inlet, full/part circle, dual trajectory
- **INF35-6** - 1" ACME inlet, full/part circle, 24 position TruJectory
- **INF55-6** - 1.5" ACME inlet, full/part circle, 24 position TruJectory

The SMART ACCESS feature adds several significant capabilities that allow maintenance crews to access most internal components without having to dig or turn off the water.

Prior to installing the sprinkler, please read this Installation and Service Guide for proper installation and servicing procedures. Observe all **Warnings** and **Cautions** when installing and operating this equipment.

Product Features

- Top accessibility of the pilot valve, GDC intelligence module, wire splices, and all future enhancements. No excavation required to access any internal components.
- Pilot valve is removeable while system is under pressure.
- Compartments provide space for current features and future enhancements.
- Similar physical dimensions as Toro's original sprinkler bodies for easy replacement.
- Removeable marker is customizable for yardage markers, station number, golf course branding, and/or other customer desired information.

Installation

Toro Swing Joints

Toro recommends using Toro Swing Joints for INFINITY Series sprinklers.

- On sites where the possibility of heavy equipment rolling over the sprinkler exists, the swing joint will flex preventing damage to the lateral or main lines.
- On a new installation in raw ground where the sprinklers are to be initially installed above the finished grade and lowered when the turf is established, the swing joint allows sprinkler repositioning without changing risers.

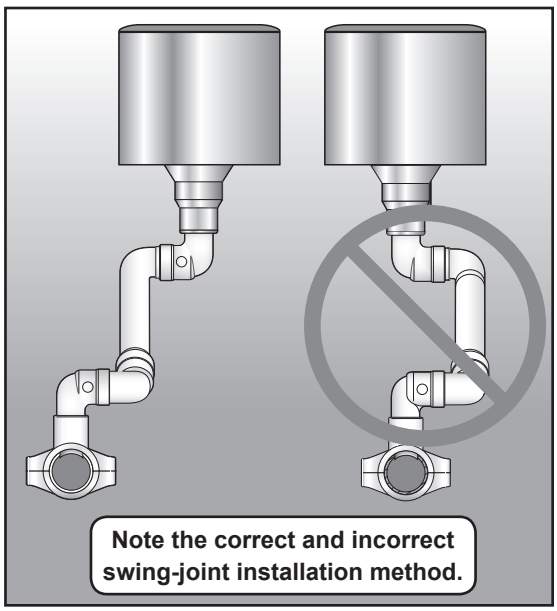

ACME Thread Notes

The ACME thread golf sprinkler body requires an ACME thread swing joint for connection to the piping system. The ACME swing joint has an o-ring on the exit fitting that provides a water-tight seal inside the sprinkler body when properly assembled.

CAUTION: With the ACME fitting, ***do not*** use thread sealants such as Teflon™ tape or pipe dope.

Important! For ease of assembly and to ensure proper sealing, moisten the o-ring with **clean water** just prior to installation.

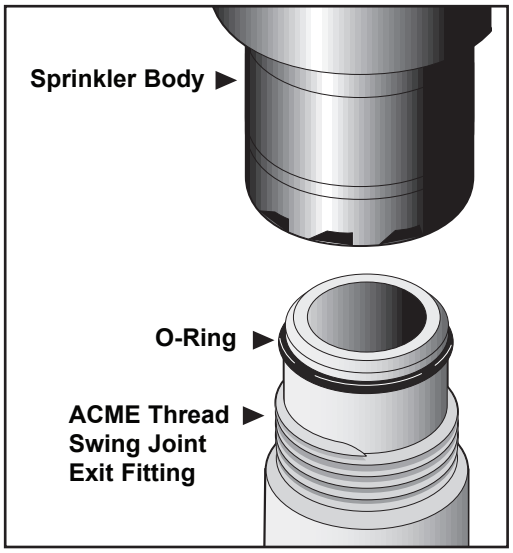

To Install Sprinklers:
Screw the sprinkler body clockwise onto the ACME swing joint exit fitting until it stops. No further adjustment is required.

CAUTION: Leakage between the swing joint exit fitting and the sprinkler body may indicate that the o-ring is improperly seated, missing, damaged and/or the sprinkler body is not completely installed.

If leakage is observed, perform the following procedure:

1. Shut off and relieve system water pressure.
2. Remove the sprinkler from the swing joint fitting.
3. Verify that the o-ring is undamaged and is properly seated in the o-ring groove. (Replace the o-ring if necessary.)
   Moisten the o-ring with water, reinstall the sprinkler, repressurize the system and check for leakage.

Unpacking the Sprinkler

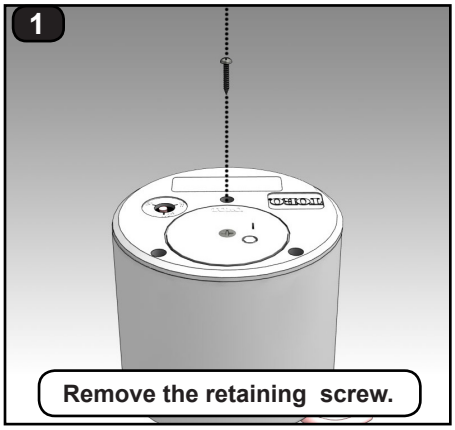

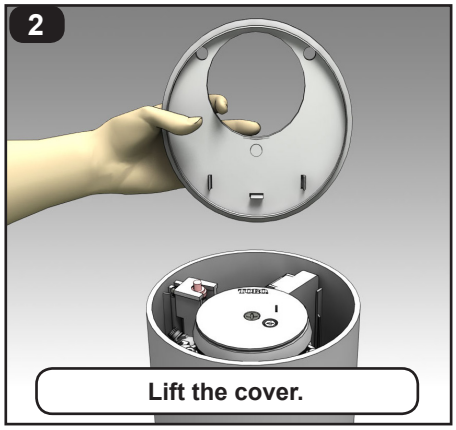

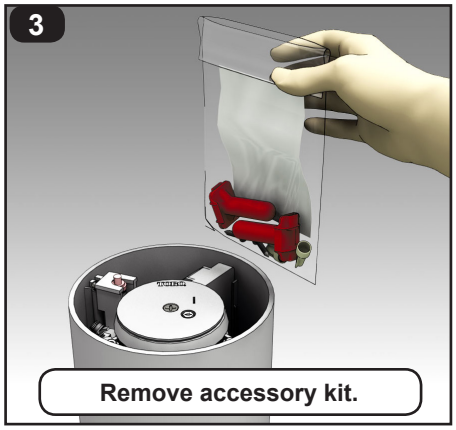

Waterproof Wire Splices

CAUTION: All wire splices and field connections must be waterproofed to prevent short circuit to ground and subsequent controller damage.

This type of waterproofed wire splice is for use with solid and/or stranded wire connections.

1 - 3 #12	1 - 4 #14	2 - 5 #16
2 - 5 #18	1 #10 w/ 1-4 #18	1 #12 w/ 1-4 #18
2 #12 w/ 1 or 2 #18	1 #14 w/ 1-4 #18	3 #14 w/ 1 or 2 #18

Steps

1. Strip wires (12-16 gauge) 7/16” (11 mm)
2. Pre-twisting is unneccessary. Hold stripped wires together with ends even (**Figure 1**). Lead stranded wires slightly. Align any frayed strands or conductors.
3. Firmly push wire into connector and screw connector clockwise onto wire until tight (**Figure 1**).
4. Insert the splice *to the bottom* of the sealant filled tube (**Figure 2**).
5. Position wires into wire channels (**Figure 3**). Wipe away any sealant around opening and conductors.
6. Close lid ensuring latch is secured (**Figure 4**).

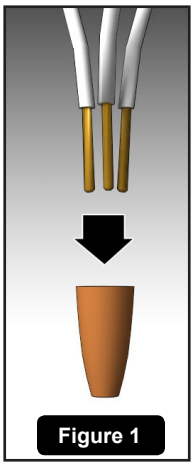

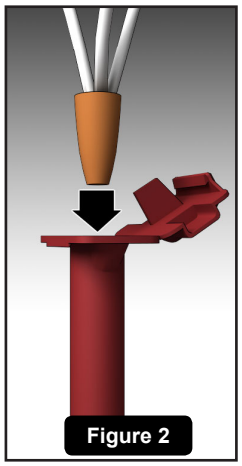

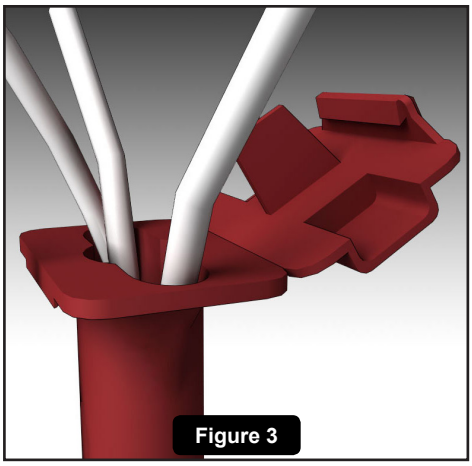

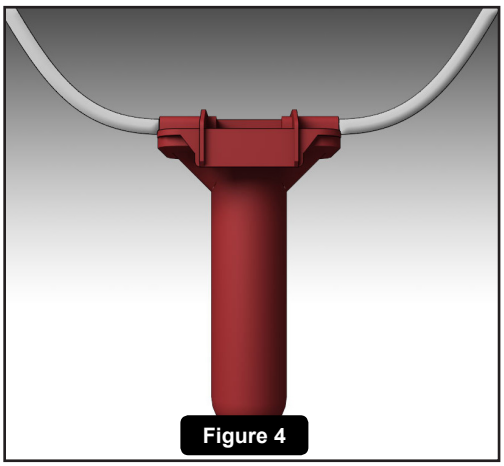

Connecting Communication Cable to the INFINITY Series with GDC Module

The GDC system provides a coded DC signal over a polarity sensitive color coded communication cable that requires correct connections to ensure proper operation. The GDC system also employs a daisy chain communication network where all sprinklers, except the last one on a wire run, will have one cable coming in from the Gateway or closer sprinkler and another going out to the next sprinkler.

1. If using jacketed cable, remove ~20" (508 mm) of shielding from communication cable(s).
2. Route wires through the access grommet in the bottom of the sprinkler compartment. Provide a service loop below the sprinkler to allow for height adjustment and future servicing. (See **Figure 1**.)
3. Pull cable(s) out the top of the sprinkler approximately 6″ (152 mm). (See **Figure 2**.)
4. Strip 12-16 gauge wires 7/16″ (11 mm) of insulation. (See **Figure 2**.)
5. Connect the white cable wire(s) and the white GDC module wire with a wire nut and install into a waterproof grease cap (both provided). (See **Figure 3**.)
6. Repeat for the black wire(s). (See **Figure 3**.)
7. Fold and tuck the cable connections into the compartment pocket.
8. Record GDC module address and reference to site location. Remove the 2 additional address labels from the accessory kit. Affix one to the cover for temporary future reference and the other to the location identification form for entry at the central controller.
9. Replace cover and install the three (3) cover screws (from accessory kit). Tighten to 25 in/lb. (34,6 kilogram force meters) max or medium torque and low speed setting on a battery-powered screw-driver.

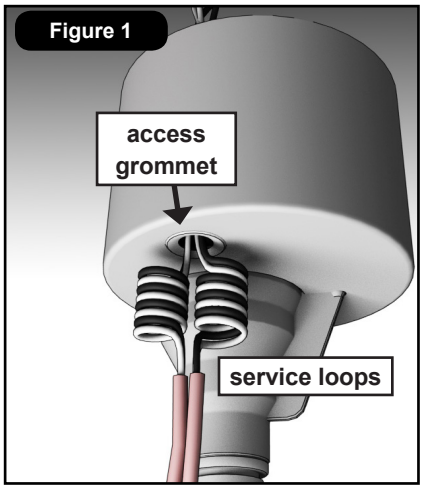

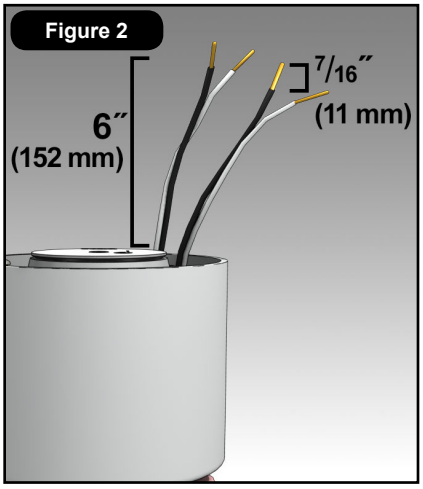

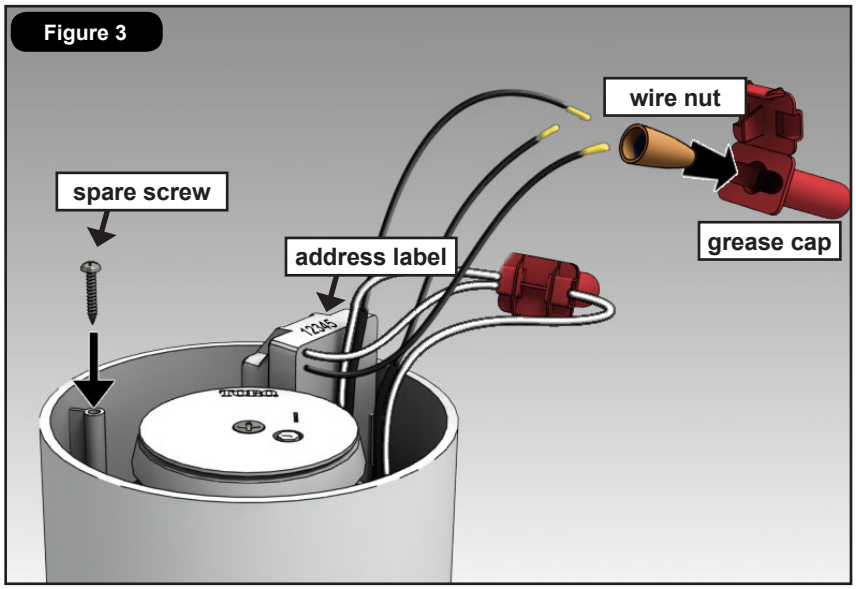

Connecting Control Wires to the INFINITY Series with *Satellite*

The field satellite controllers provide a 24 VAC signal to the sprinklers typically using individual wires. Connections to the sprinkler solenoid in these systems are not polarity sensitive and do not require specific wire connections. Typically the "common" wire from the controller is daisy-chained to multiple sprinklers with one wire coming in from the satellite or closer sprinkler and the other going on to the next sprinkler. The station output "hot" wire typically connects to a single sprinkler but can also be daisy-chained to multiple sprinklers depending upon the control system capabilities.

1. Route all wire(s) through the access grommet in the bottom of the sprinkler compartment providing a service loop below the sprinkler to allow for height adjustment and future servicing. (See **Figure 1**.)
2. Pull all wire(s) out the top of the sprinkler approximately 6″ (152 mm). (See **Figure 2**.)
3. Remove 7/16″ (11 mm) of the insulation from all of the control wires. (See **Figure 2**.)
4. Connect the "common" wire(s) to one of the solenoid wires with a wire nut and install into a waterproof grease cap (both provided). (See **Figure 3**.)
5. Repeat for the station output "hot" wire(s). (See **Figure 3**.)
6. Fold and tuck the wire connections into the compartment pocket.
7. Replace cover and install the three (3) cover screws (from accessory kit). Tighten to 25 in/lb. (34,6 kilogram force meters) max or medium torque setting on a battery-powered drill.

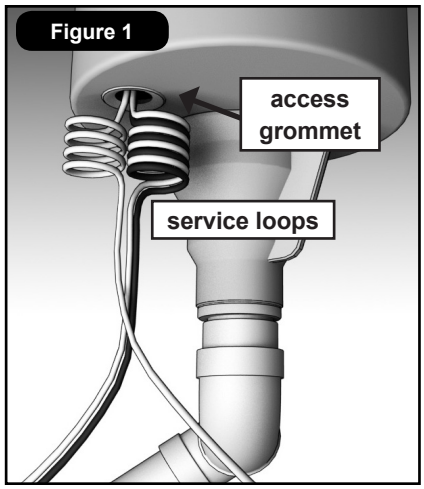

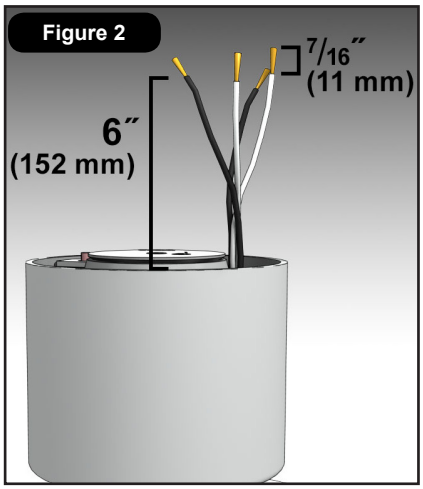

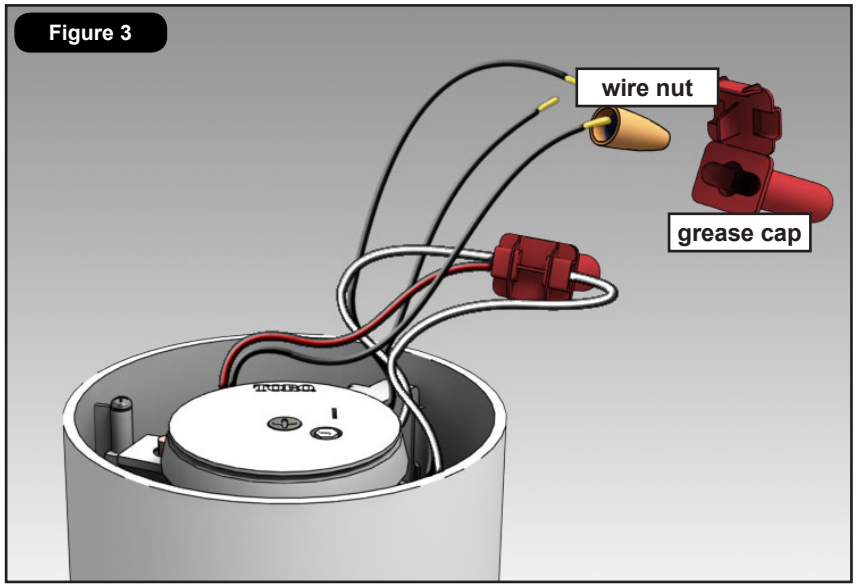

Final Adjustments

Adjust the swing joint to bring the top of the sprinkler flush to grade. Back fill with clean porous material that promotes drainage. Tamp the soil around the sprinkler to compact the soil and prevent settling.

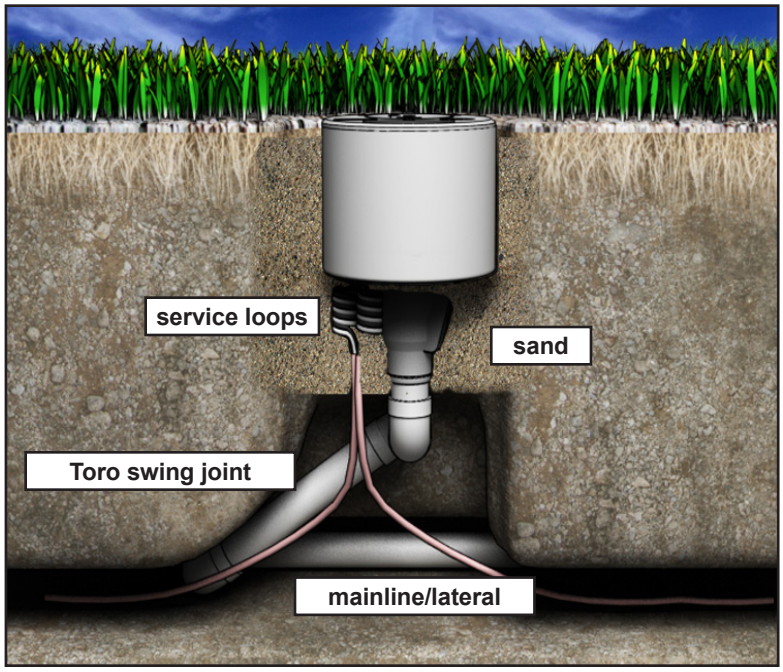

Table 1: Recommended System Fill Rate

Pipe Size		Flow		Velocity		Pipe Size		Flow		Velocity	
inch	cm	GPM	LPM	ft/sec	m/sec	inch	cm	GPM	LPM	ft/sec	m/sec
1/2	1.3	2	7.6	1.60	0.49	3	7.6	45	170.3	1.86	0.57
3/4	1.9	3	11.4	1.92	0.59	4	10.1	75	283.9	1.87	0.57
1	2.5	5	18.9	1.50	0.46	6	15.2	150	567.8	1.73	0.53
1-1/4	3.1	10	37.9	1.86	0.57	8	20.2	250	946.3	1.70	0.52
1-1/2	3.8	10	37.9	1.41	0.43	10	25.4	450	1703.0	1.97	0.60
2	5.0	20	75.7	1.80	0.55	12	30.5	500	1893.0	1.55	0.47
2-1/2	6.4	30	113.6	1.84	0.56						

On - Off - Auto

For normal operation, the Selector should be set to **AUTO**.

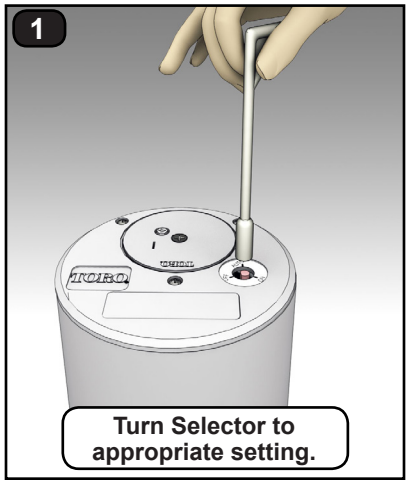

ON Sprinkler will operate immediately.

OFF Sprinkler will not operate even when solenoid is activated.

AUTO Normal operation. Sprinkler will operate when solenoid is activated according to the irrigation schedule.

Changing the Sprinkler's Pressure Setting

The sprinkler pilot valve can be set to four different pressure settings: 50, 65, 80, or 100 psi (3,5, 4,6, 5,6, or 7,0, kg/cm^2 respectively). The sprinkler pilot valve pressure is preset to the customer's specifications.

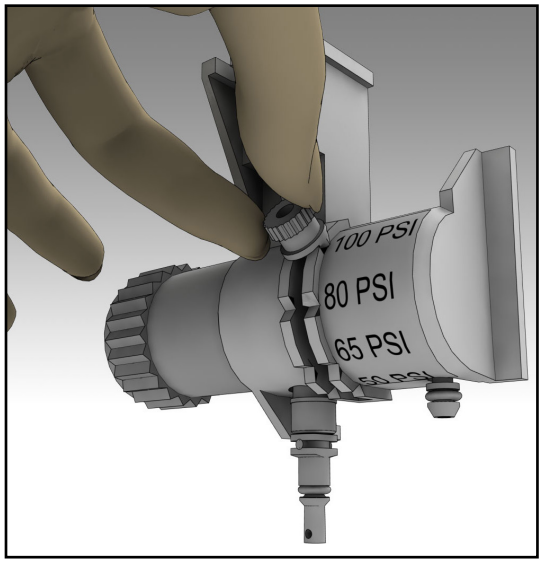

To change the setting:

1. Loosen adjustment knob.
2. Move knob to desired pressure setting.
3. Tighten adjustment knob.

To Remove Pilot Valve Assembly, follow steps on page 9.

Service

The INFINITY Series sprinklers are designed to provide the user trouble-free operation for many years without scheduled maintenance. If it becomes necessary to disassemble the sprinkler to correct a malfunction or replace a component, all internal parts of the sprinkler can be accessed from the top. Some special tools are required for disassembly and/or maintenance of the sprinkler and are available from your Toro dealer.

To Remove the Lid

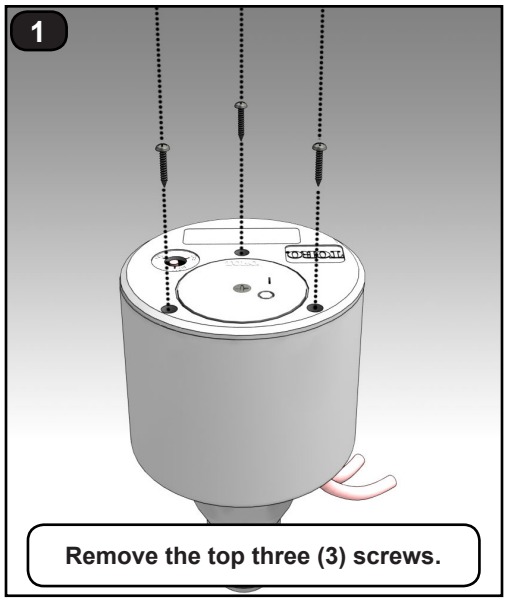

To Remove the Marker

Every Toro INFINITY Series Sprinkler comes with a removable identification "marker". This marker can be customized with yardage numbers, company logos, and more. Contact your Toro distributor for information regarding markings.

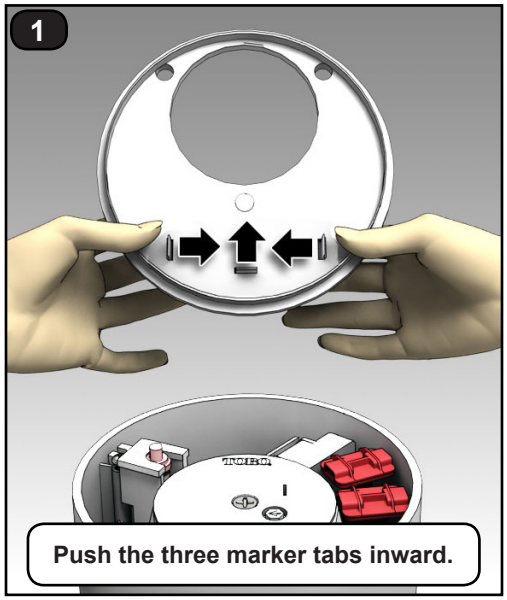

To Service the GDC Module

The GDC module has wires running directly to the solenoid. Replacement requires cutting and splicing wires. Use water-proof wire splices to make all connections (see page 3).

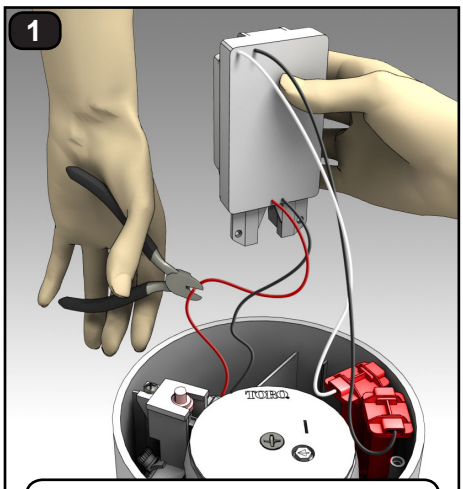

Slide out Module.
Cut red and black Solenoid wires.

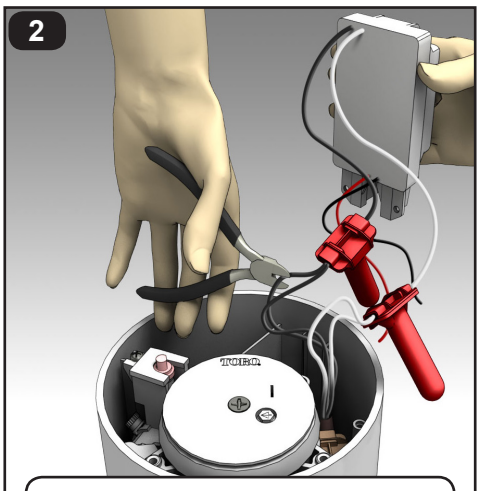

Cut black and white Control wires.
Dispose of old Module.

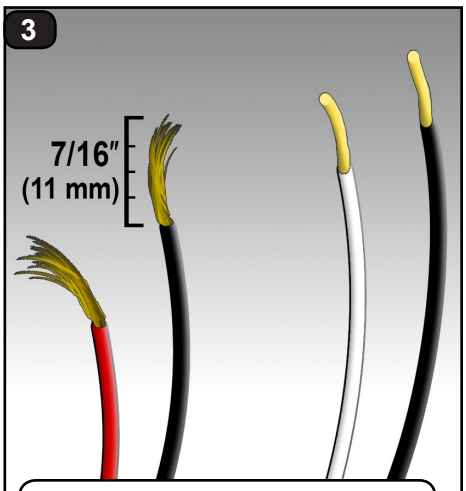

Strip 7/16" (11 mm) wire from Solenoid and Control wire endings.

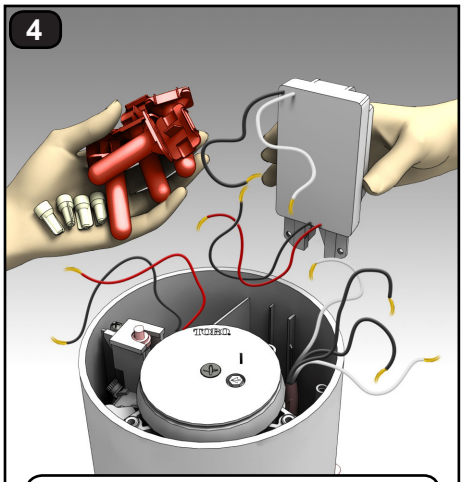

Get new Module*, 4 wire nuts, and 4 grease caps.

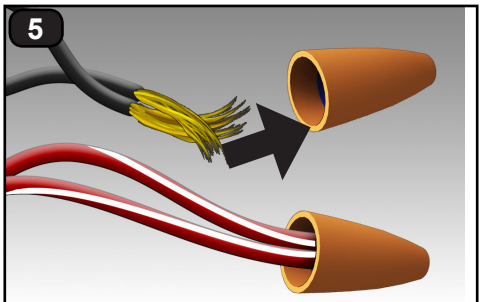

Module wires are in pairs.
Black to black and
red with white stripe to same.

Black and white attach to black and white Control wires.

Insert all wire ends into wire nuts.

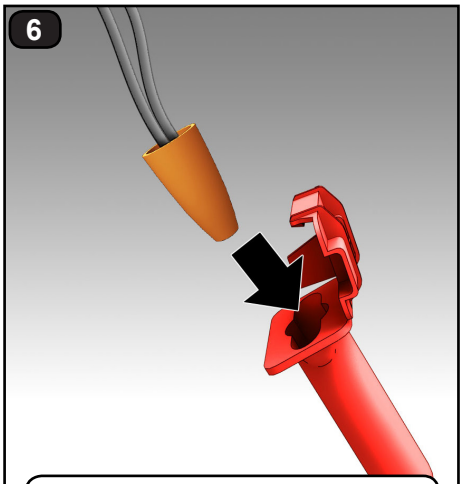

Insert all wire nuts into grease caps and snap closed.

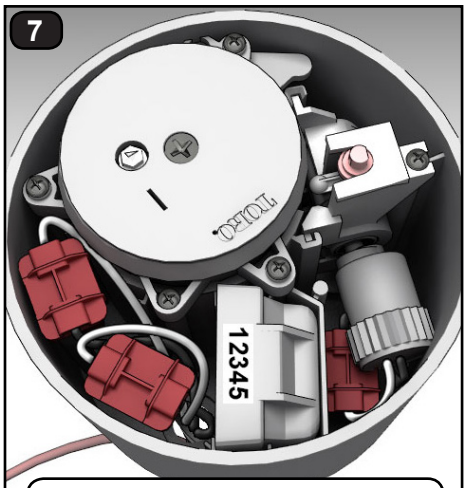

Put Module and all wiring carefully back into sprinkler body.

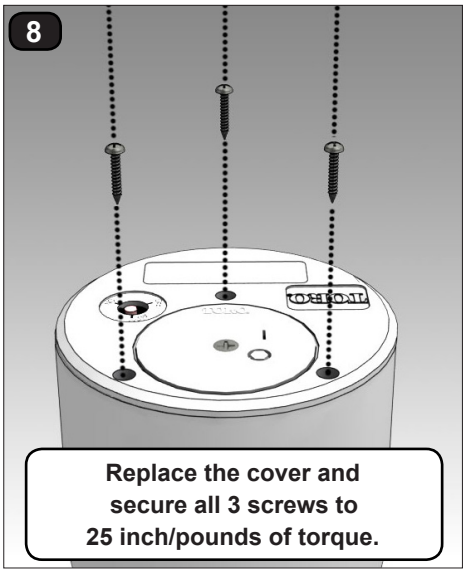

Replace the cover and secure all 3 screws to 25 inch/pounds of torque.

*Remember to record new Module address for re-entry at the Central Controller!

Operating the INFINITY™ sprinkler without the cover or with loose or missing cover screws may shorten the expected service life of the sprinkler.

To Service the Pilot Valve

The pilot valve can be replaced while the system is under pressure. Remove the pilot valve for service.

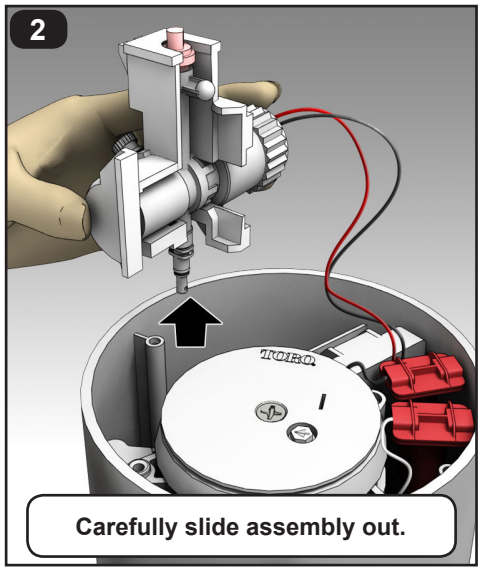

Refer to **Figure 1** for pilot valve service issues.

1. Unthread solenoid (17), unthread thumbnut (7), and remove locator (6).
2. Remove diaphragm assembly (1), piston (2), spring (3), traveling adjuster (4), pressure adjuster (5) and o-ring (11).
3. Remove selector shaft (10) and plunger assembly (12). (The selector shaft retains the plunger in the valve body.)
4. Thoroughly clean and inspect all parts. Ensure threads are clean on solenoid and PV body prior to assembly. Replace damaged parts as necessary and reassemble in reverse order. Improper solenoid assembly or cross-threading may result in damage to PV body and/or malfunctions.

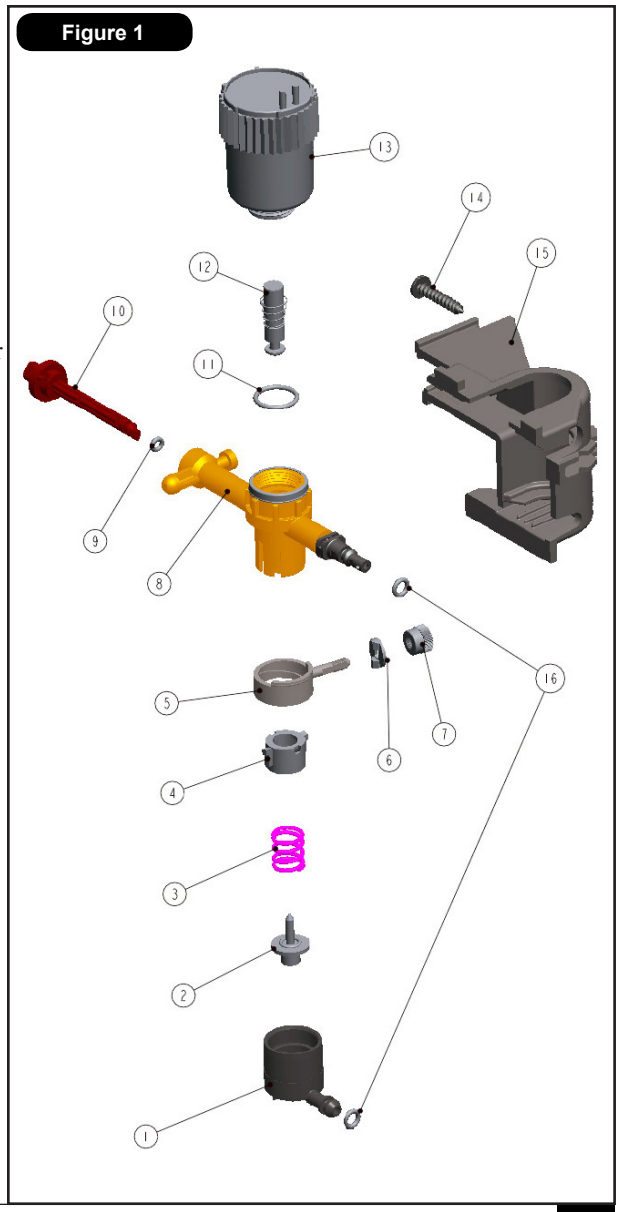

Pilot Valve Parts Breakout

1.	118-1825	Diaphragm, Welded
2.	102-2469	Piston, PV, adjustable
3.	102-2235	Spring, adjustable PV
4.	102-2236	Nut, traveling
5.	102-2237	Adjuster, PV
6.	102-2606	Locator, Pressure Setting
7.	343-4441	Nut, Thumb
8.	118-3711	PV, Body, Infinity
9.	1-2035	O-ring
10.	102-4831	Selector, PV, red (included item 9)
11.	360-0220	O-ring
12.	118-1740	Plunger
13.	118-0248	Solenoid, Standard
13.	102-3443	Solenoid, SPIKE GUARD
13.	102-3444	Solenoid, Nickel plated, SPIKE GUARD
13.	102-2709	Solenoid, DC Latching
13.	118-0841	GDC Module w/ DC Latching Solenoid
14.	4102001	Screw, #10 x 1”, Tapping, SS
15.	118-1816	Housing, Pilot Valve
16.	2-9654	O-ring

To Replace the Pilot Valve Solenoid

There are two Step 1s, depending on which version of the INFINITY Series sprinkler is being serviced.

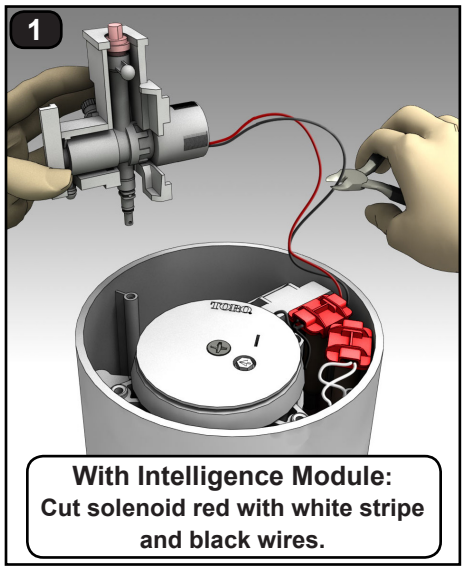

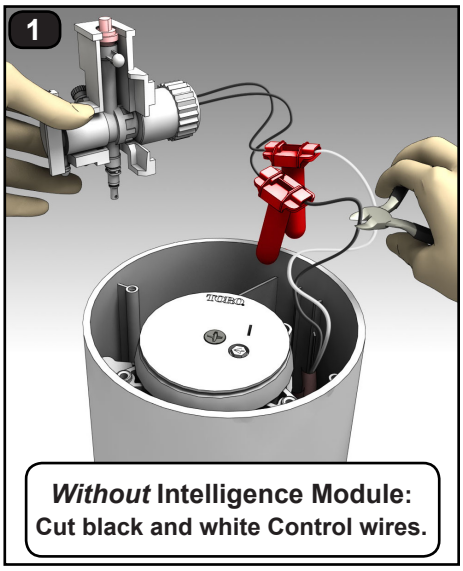

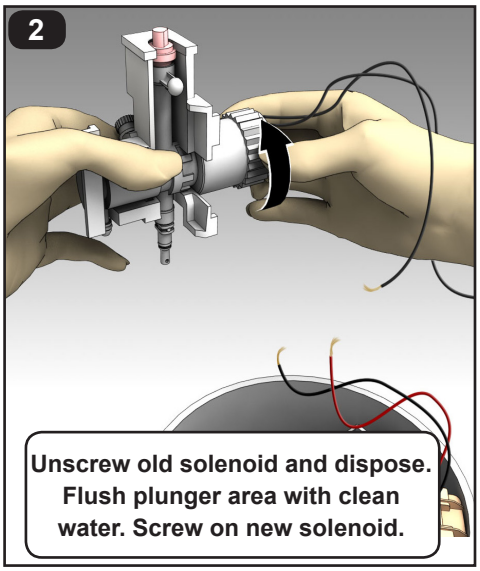

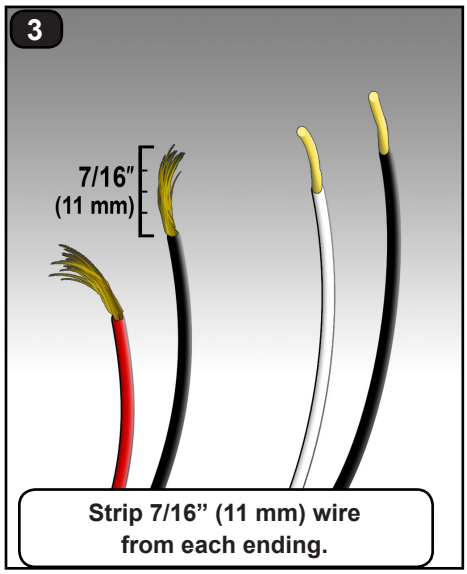

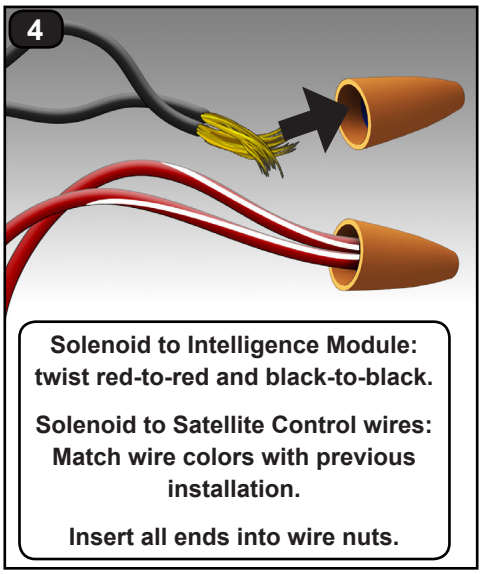

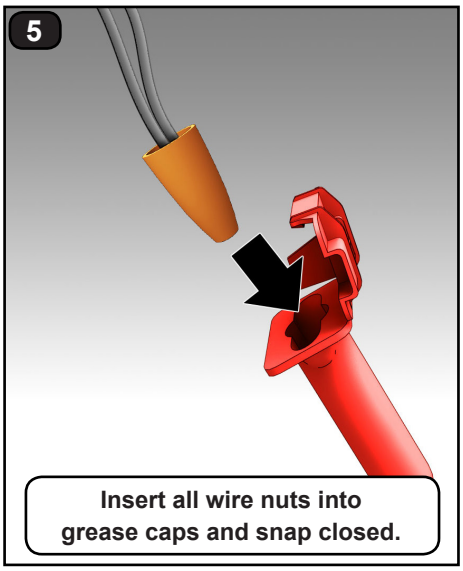

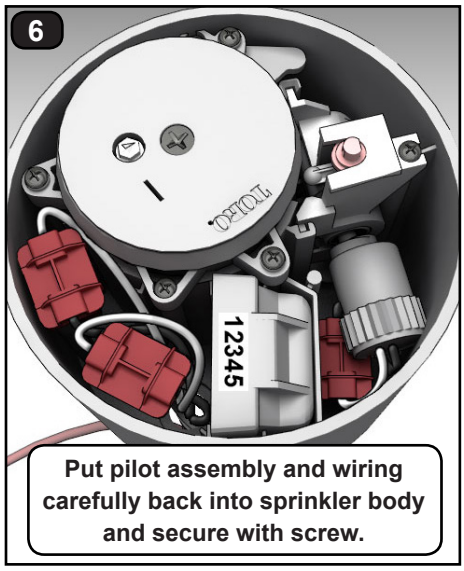

To Remove the Sprinkler Riser Assembly

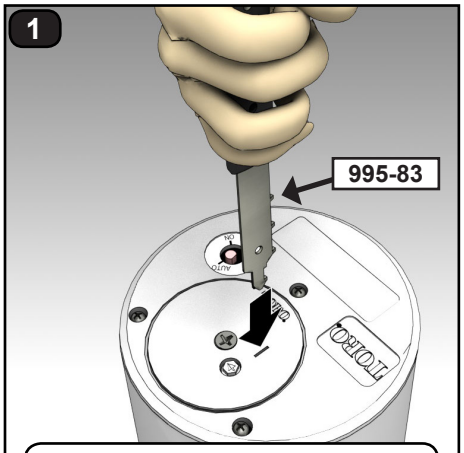

Insert the multipurpose tool into slot of riser cap. Tilt tool back to lock it in.

Pull up riser and grasp firmly.

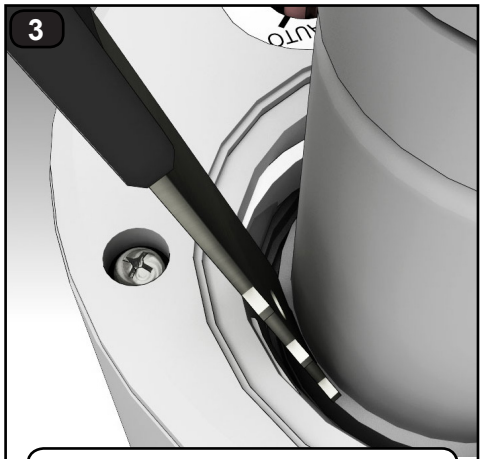

With multipurpose tool, push seal retainer down hard to release snap ring.

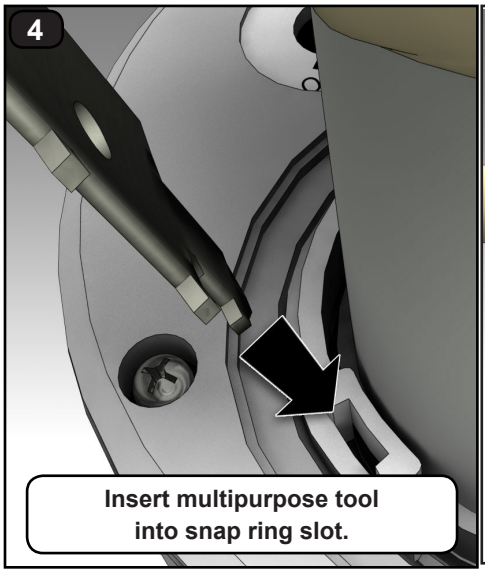

Insert multipurpose tool into snap ring slot.

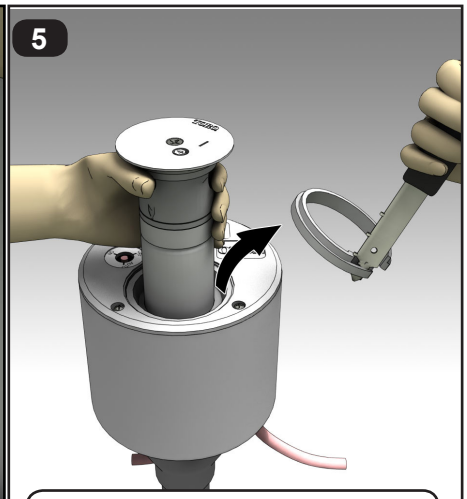

Twist and remove snap ring.

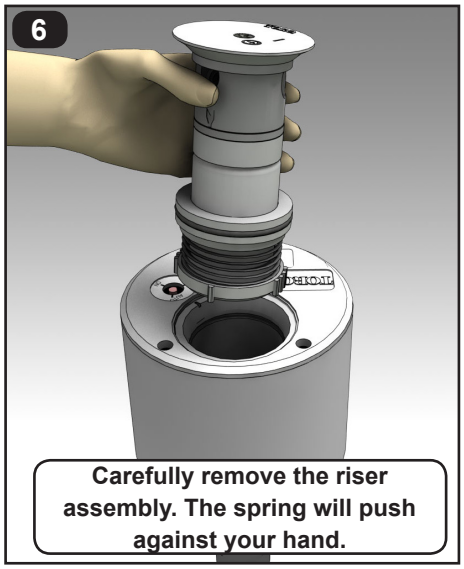

Carefully remove the riser assembly. The spring will push against your hand.

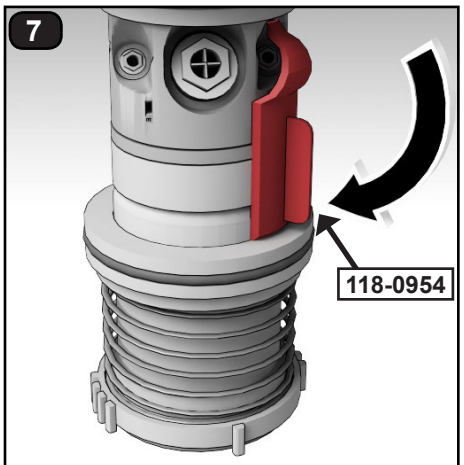

Insert the “hold up” tool into nozzle notch and riser spring collar.

For INF34 and INF54 Sprinklers (Full Circle only)

Refer to **Figure 8** for the following procedure.

1. Grasp return spring (14) and riser (16) firmly and hold in place while removing nozzle base (4). Turn nozzle base assembly counter-clockwise to remove.
2. Carefully release tension from return spring.
3. Remove spring and seal retainer/o-ring assembly (12 and 13).
4. Remove riser screen (19) by turning it counterclockwise with edge of multi-purpose tool (P/N 995-83) or tips of snap ring pliers (P/N 995-100).
5. Remove o-ring (15) from top of riser assembly.
6. Remove drive assembly (17) and stator (18) from riser assembly by carefully pressing on end of threaded shaft.
7. Using a 5/8" nut driver (P/N 995-99), unscrew main nozzle (10) from nozzle housing (8). The riser cap (3) must still be attached to the nozzle base assembly (4), or the nozzle housing (8) will turn instead of the main nozzle.
8. Using a 5/16" nut driver (P/N 995-105), unscrew intermediate nozzle (6) and inner nozzle (5) and plugs (7) from the nozzle base assembly.
9. Thoroughly clean and inspect all parts and replace as necessary.

During reassembly, ensure snap ring is correctly installed and fully seated in snap ring groove. Use the Multipurpose tool to assist in proper placement.

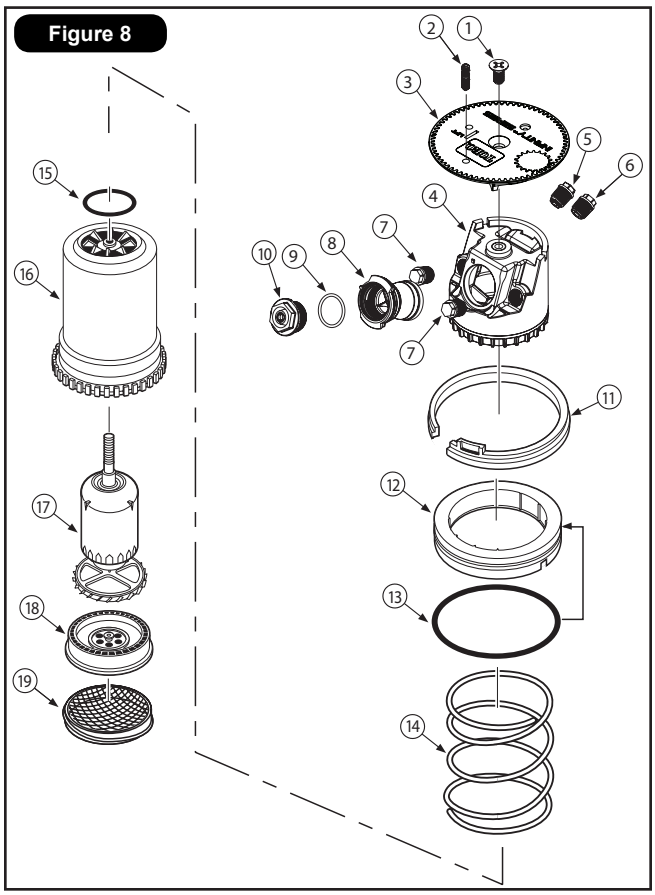

For INF35 and INF55 Sprinklers (Full/Partial Circle)

Refer to **Figure 9** for the following procedure.

1. Remove riser screen (17) by turning it counterclockwise with edge of multi-purpose tool (P/N 995-83) or tips of snap ring pliers (P/N 995-100).
2. Remove the variable stator (16) from riser assembly.
3. Loosen the drive assembly retaining screw (14) six or seven turns and pull the drive assembly (15) using a pair of pliers.

CAUTION: When removing or installing the drive assembly, do not use the turbine to pull the drive assembly. Use the drive assembly body to extract it out. Failure to comply may cause separation of the drive assembly components.

During reassembly, ensure drive assembly is properly aligned with the retaining screw.

4. Using a 5/8" nut driver (P/N 995-99), unscrew main nozzle (9) from nozzle base assembly.
5. Using a 5/16" nut driver (P/N 995-105), unscrew the inner (8), intermediate (7) nozzles, and plug (12).
6. Thoroughly clean and inspect all parts and replace as necessary.

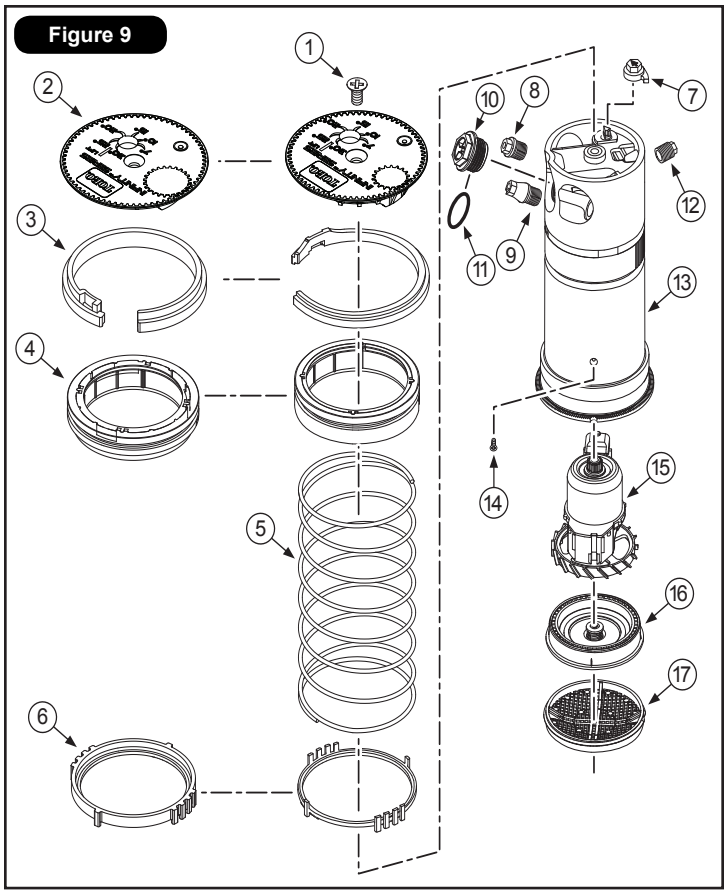

To Install the INF35 and INF55 Sprinkler Riser Assemblies

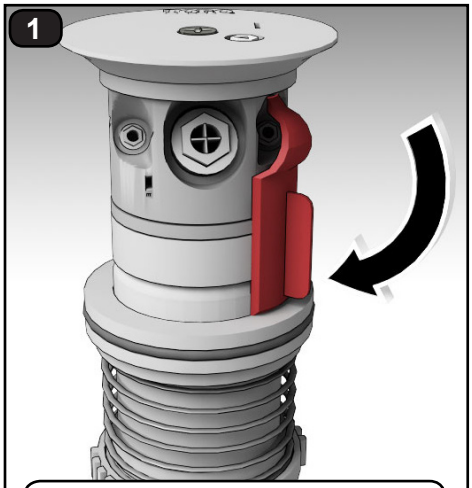

Insert the "hold up" tool into nozzle notch and riser spring collar.

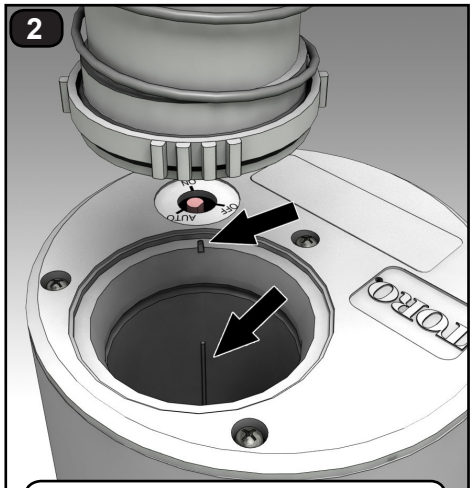

Note locations of alignment notch and rib.

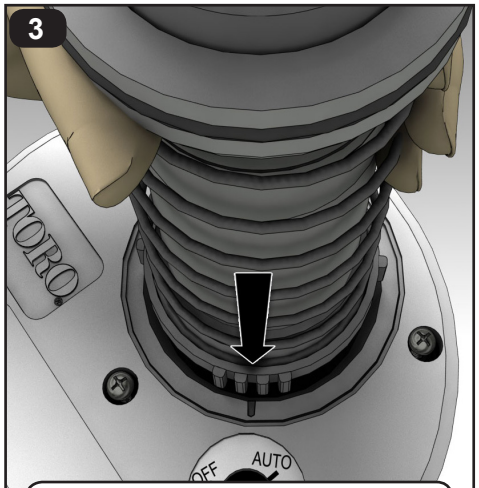

Center the ratchet ring on the alignment notch and insert riser.

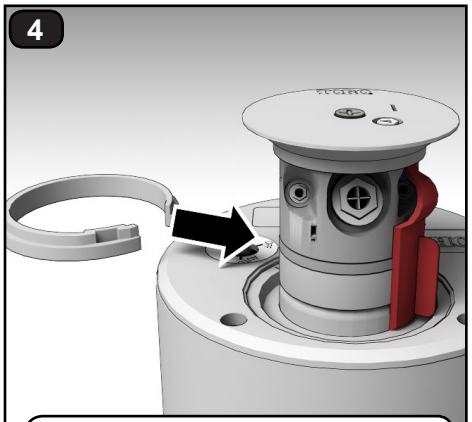

Press retainer / o-ring assembly down below snap ring groove. Put snap ring, stepped side up, around riser body.

Push snap ring down until it "snaps" into place. The multipurpose tool can help.

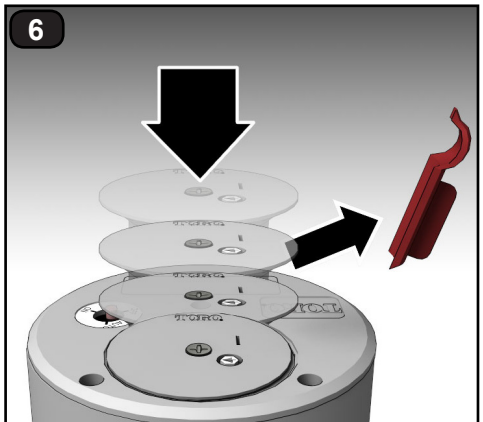

Remove "hold up" tool and lower riser to retracted position.

To Install the INF34 and INF54 Sprinkler Riser Assembly

To install the INF34 and/or the INF54, follow the steps above *except* for the steps 2 and 3; those are not necessary.

To Service the Main Valve and Rock Screen

WARNING: To service the main valve, the water supply to sprinkler must be shut off and any residual water bled off.

WARNING

NEVER STAND OR LEAN OVER THE SPRINKLER WHILE THE IRRIGATION SYSTEM IS BEING FILLED, DURING MANUAL OR AUTOMATIC OPERATION, OR WHEN PERFORMING SPRINKLER SERVICE PROCEDURES. DIRECT CONTACT WITH IRRIGATION SPRAY, A FAILED OR IMPROPERLY INSTALLED SPRINKLER CONNECTION, OR SPRINKLER COMPONENTS FORCIBLY EJECTED UPWARD UNDER PRESSURE CAN CAUSE SERIOUS INJURY.

The riser assembly must be removed from the sprinkler body to service the main valve. See page 11 to remove riser assembly.

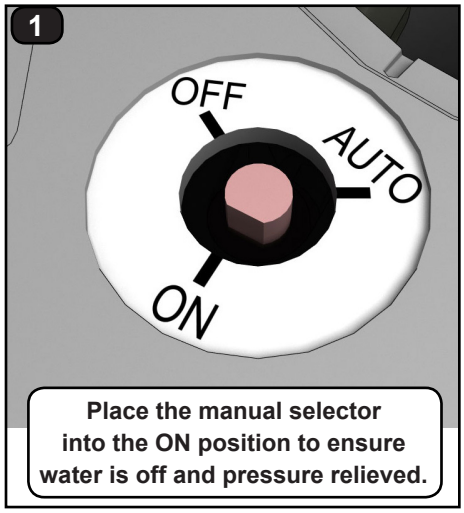

Place the manual selector into the ON position to ensure water is off and pressure relieved.

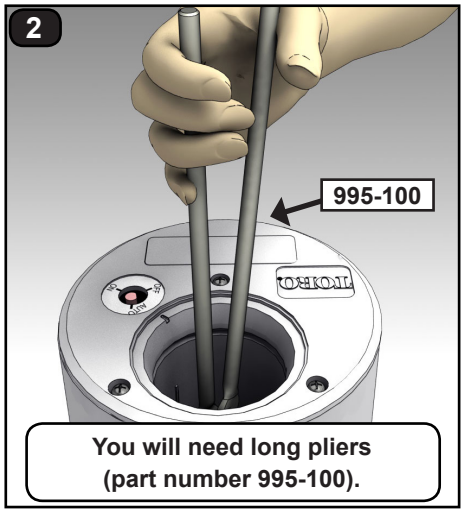

You will need long pliers (part number 995-100).

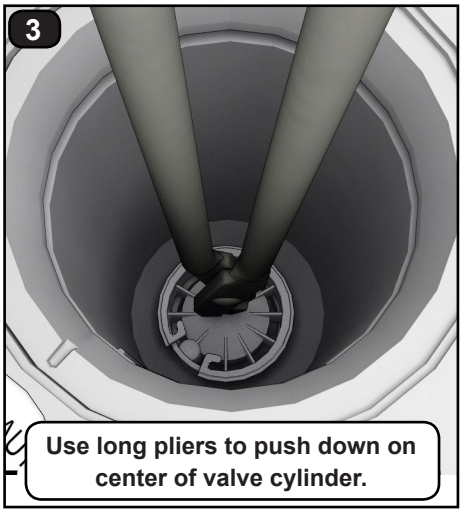

Use long pliers to push down on center of valve cylinder.

Then grasp snap ring at "hooks" and squeeze together.

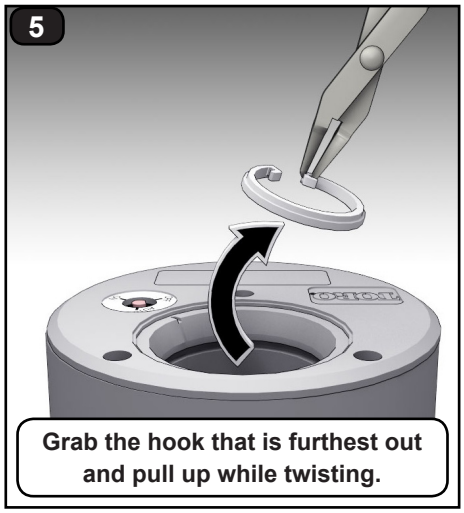

Grab the hook that is furthest out and pull up while twisting.

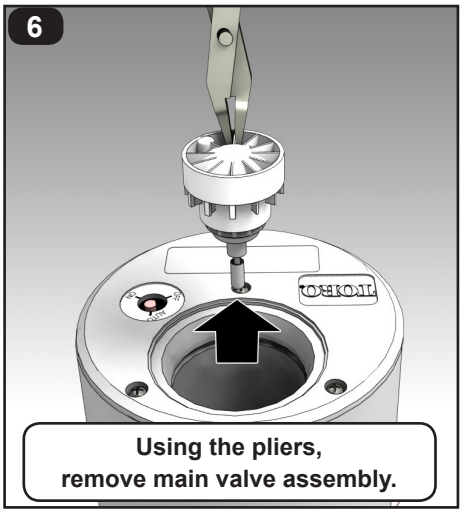

Using the pliers, remove main valve assembly.

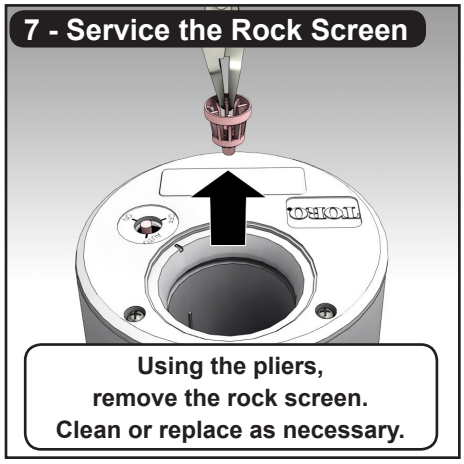

Using the pliers, remove the rock screen. Clean or replace as necessary.

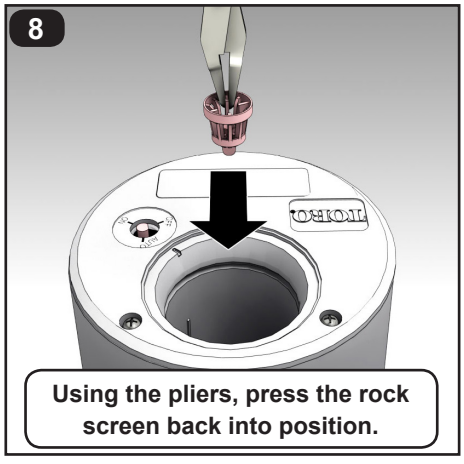

Using the pliers, press the rock screen back into position.

To Reinstall Main Valve

Use the valve insertion tool. There are two sizes of the tool depending on the size of the sprinkler inlet.

- 118-1843 is the 1.5” (40 mm) valve insertion tool
- 118-1844 is the 1” (25 mm) valve insertion tool

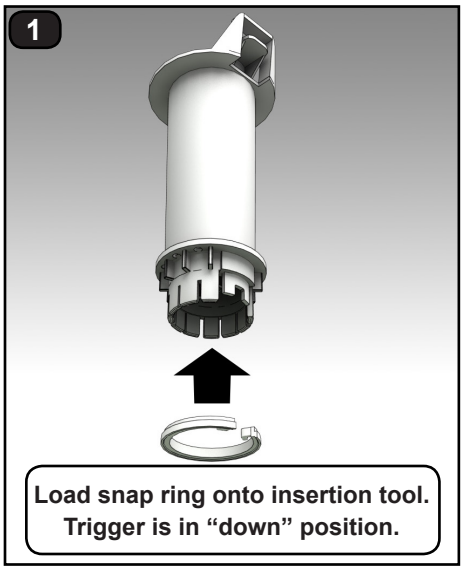

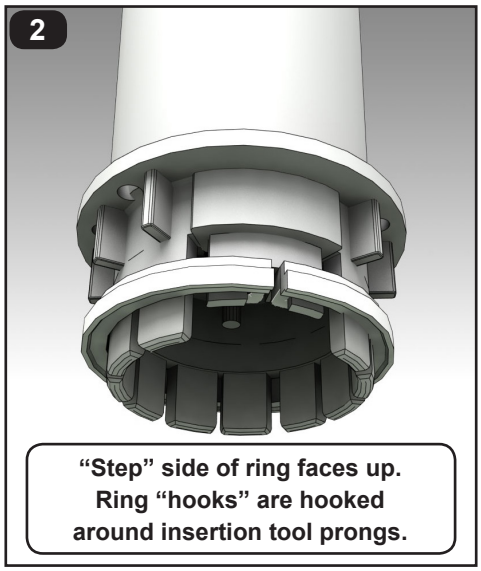

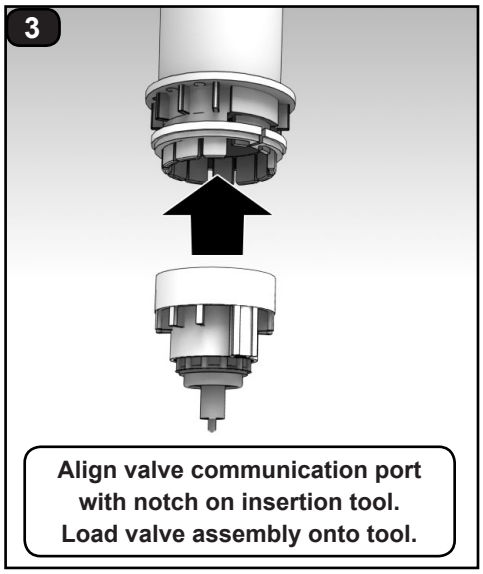

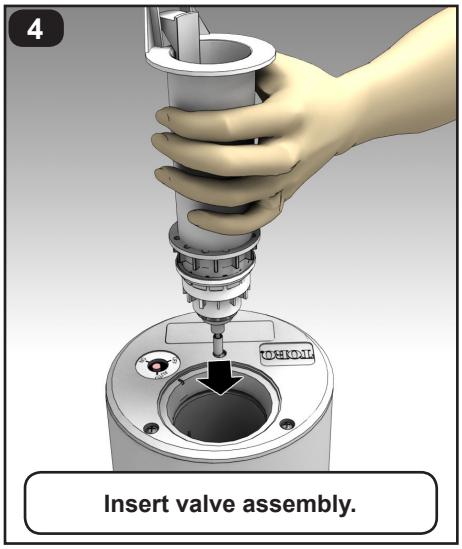

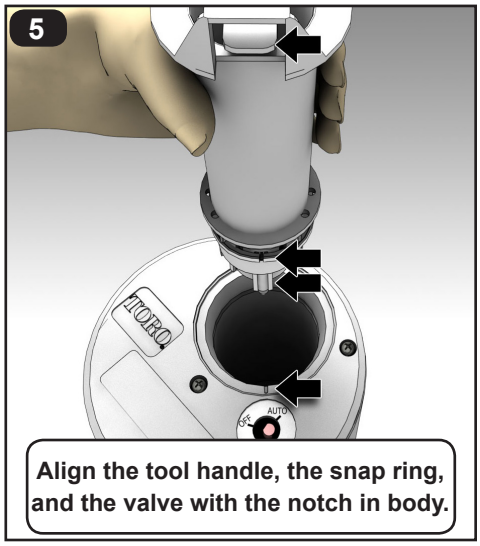

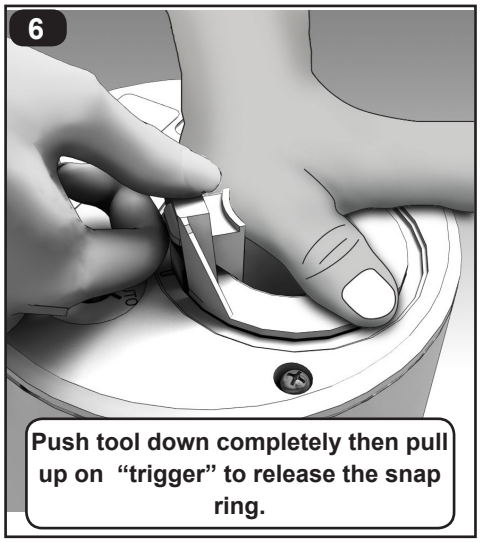

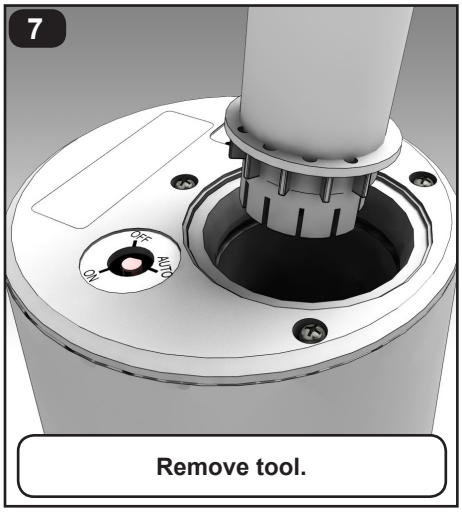

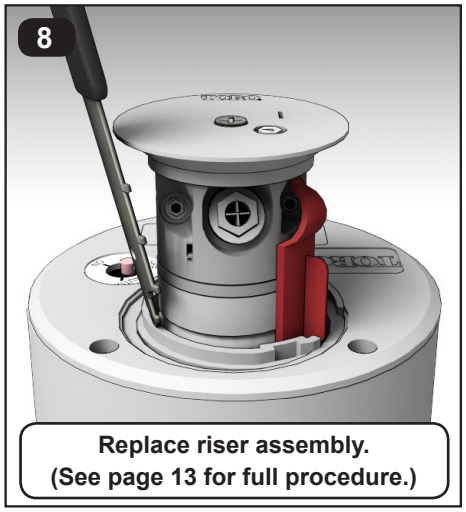

The snap ring will “snap!” into groove when properly installed. Remove insertion tool and check snap ring to confirm that it is fully seated in groove.

Flushing the Sprinkler

1. With sprinkler operating, carefully step down on center of cap several times. Water will flow around riser and flush out debris.
2. Cycle sprinkler on and off several times to check for proper retraction. Cap should be even with top of body flange when fully retracted. If riser sticks in up position, check for debris lodged between riser and body. Flush out all debris. Remove riser assembly if necessary.

Troubleshooting Guide

Problem	Cause	Solution
Sprinkler will not turn on.	No 24 VAC to solenoid assembly.	Measure voltage with a Digital Volt Meter. Check wiring and controller program.
	Debris in pilot valve assembly.	Disassemble and remove all debris. (See Servicing Pilot Valve, page 9.)
	Selector cam in “OFF” position.	Set to “AUTO” position.
	Pilot valve solenoid inoperative.	Remove and replace solenoid.
	Pilot valve plunger movement restricted.	Inspect, clean, and/or replace.
	No water supply from main valve.	Debris in control tube, main valve assembly, and/or communication passages in body. Flush thoroughly.
Sprinkler will not shut off.	Constant 24 VAC from controller	Check for voltage using a DVM. If voltage is present, disconnect wire. If sprinkler closes, service controller. Refer to Controller Service Manual.
	Selector cam in “ON” position.	Set to “OFF” position.
	Debris in pilot valve assembly.	Disassemble and remove all debris. (See Servicing Pilot Valve, page 14.)
	Leak in pilot valve assembly.	Replace pilot valve assembly.
	Plugged supply screen on piston.	Clean or replace screen on main valve piston.
	Plunger movement restricted.	Inspect and clean or replace.
	Valve cylinder misaligned with sprinkler body communication tube.	Remove valve assembly and install correctly.
	Foreign object keeping valve from seating.	Remove, clean, and check for valve damage. Replace if necessary.
	Damaged piston seal or piston assembly.	Replace valve assembly.
Sprinkler will not rotate.	Debris wedged between stator and turbine.	Remove obstruction.
	Drive assembly defective.	Replace drive assembly.
	Nozzle base assembly defective.	Replace nozzle base assembly.
Head sticks up	Dirt in riser assembly.	Flush out. (See top of this page.)
	Damaged or missing return spring.	Replace spring.
	Damaged riser.	Replace riser.
Poor distribution pattern	Nozzle plugged with debris.	Clean or replace nozzle.
	Nozzle orifice damaged.	Replace nozzle.
	Low operating pressure.	Determine why system is overloaded and correct.

Toro Warranty and Support

The Toro Company and its affiliate, Toro Warranty Company, pursuant to an agreement between them, jointly warrants, to the owner, against defects in material and workmanship for a period of three years from the date of purchase. (Five years if Toro Swing Joint installed with sprinkler.) Neither The Toro Company nor Toro Warranty Company is liable for failure of products not manufactured by them, even though such products may be sold or used in conjunction with Toro products.During such warranty period, we will repair or replace, at our option, any part found to be defective. Return the defective part to the place of purchase. Our liability is limited solely to the replacement or repair of defective parts. There are no other express warranties. This warranty does not apply where equipment is used, or installation is performed, in any manner contrary to Toro’s specifications and instructions, nor where equipment is altered or modified. Neither The Toro Company nor Toro Warranty Company is liable for indirect, incidental or consequential damages in connection with the use of equipment, including but not limited to: vegetation loss, the cost of substitute equipment or services required during periods of malfunction or resulting non-use, property damage or personal injury resulting from installer’s negligence.

Some states do not allow the exclusion or limitation of incidental or consequential damages, so the above limitation or exclusion may not apply to you. All implied warranties, including those of merchantability and fitness for use, are limited to the duration of this express warranty. Some states do not allow limitations of how long an implied warranty lasts, so the above limitation may not apply to you. This warranty gives you specific legal rights and you may have other rights which vary from state to state.